ST. XAVIER'S HIGH SCHOOL

195, Khandagiri, Bhubaneswar

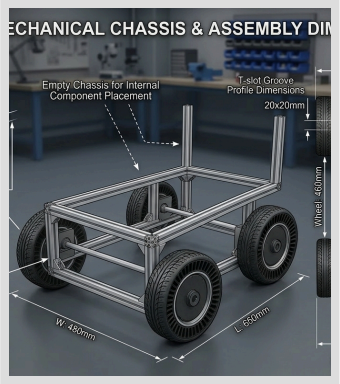

cacas

STUDENT

Blood Group :	AB+
Class :	5 - Section E
Roll No. :	4
Father's Name :	bgvfdcs
Mother's Name :	csd
Contact No. :	1234567890

Address
hbvfdcs

Valid for Academic Year 2026-2027

Principal